Cambridge International AS & A Level

Cambridge International Examinations
Cambridge International Advanced Subsidiary and Advanced Level

CANDIDATE NAME

CENTRE NUMBER | | | | | |

CANDIDATE NUMBER | | | | |

0942779956

PHYSICS **9702/33**

Paper 3 Advanced Practical Skills 1 **May/June 2015**

2 hours

Candidates answer on the Question Paper.

Additional Materials: As listed in the Confidential Instructions.

READ THESE INSTRUCTIONS FIRST

Write your Centre number, candidate number and name on all the work you hand in.
Write in dark blue or black pen.
You may use an HB pencil for any diagrams or graphs.
Do not use staples, paper clips, glue or correction fluid.
DO **NOT** WRITE IN ANY BARCODES.

Answer **both** questions.
You will be allowed to work with the apparatus for a maximum of one hour for each question.
You are expected to record all your observations as soon as these observations are made, and to plan the presentation of the records so that it is not necessary to make a fair copy of them.
You are reminded of the need for good English and clear presentation in your answers.

Electronic calculators may be used.
You may lose marks if you do not show your working or if you do not use appropriate units.

Additional answer paper and graph paper should be used only if it becomes necessary to do so.

At the end of the examination, fasten all your work securely together.
The number of marks is given in brackets [ ] at the end of each question or part question.

For Examiner's Use	
1	
2	
Total	

This document consists of **13** printed pages and **3** blank pages.

© UCLES 2015

CAMBRIDGE International Examinations

BLANK PAGE

© UCLES 2015

You may not need to use all of the materials provided.

1 In this experiment, you will investigate how the position of a suspended card varies with the distribution of masses attached to it.

(a) (i) Use the nail to make two holes in the card as shown in Fig. 1.1 and Fig. 1.2.

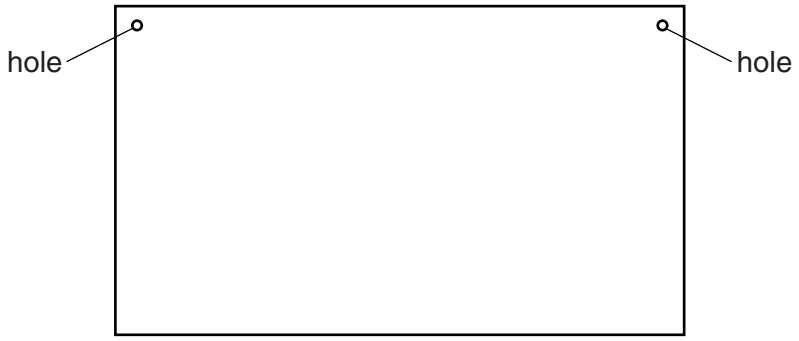

Fig. 1.1

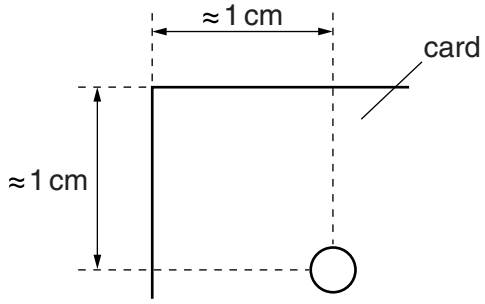

Fig. 1.2

The holes should be approximately 1 cm from the edges of the card as shown in Fig. 1.2.

Each hole should be big enough for the card to swing freely when the nail is inserted in the hole.

(ii) Record the mass *C* of the card shown on the base of the stand.

C = ... g

(b) (i) Set up the apparatus as shown in Fig. 1.3. Suspend the card from the nail through one of the holes. Hang the plumb-line from the nail. Mark the card at a point along the plumb-line as shown in Fig. 1.3.

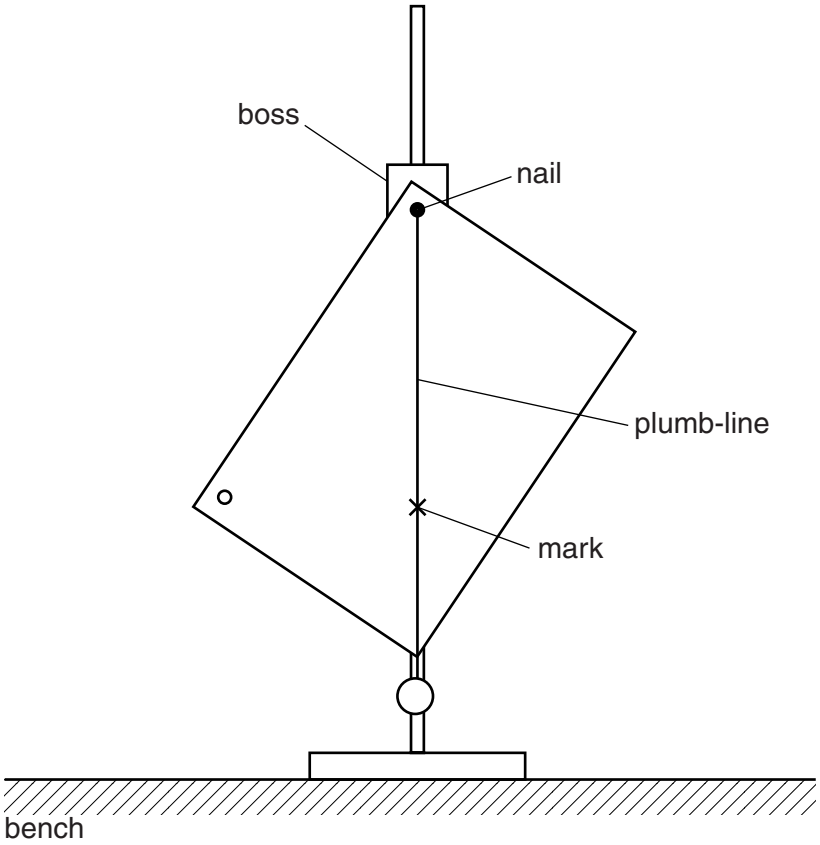

Fig. 1.3

(ii) Remove the card. Draw a line on the card through the hole and the mark. This line should go just over half the length of the card as shown in Fig. 1.4.

(iii) Repeat **(b)(i)** and **(b)(ii)** using the other hole in the card.

(iv) Measure and record the distance *y* as shown in Fig. 1.4.

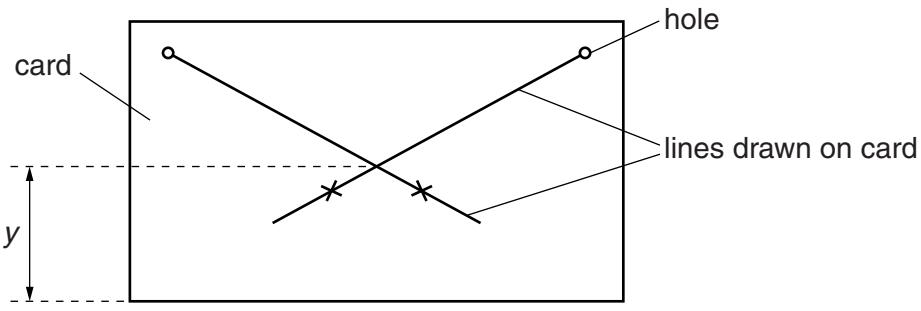

Fig. 1.4

y = ...[1]

(c) (i) Using some Blu-Tack, attach one of the 10 g slotted masses to the card. The position of the slotted mass should be half-way along the edge of the card and touching the edge as shown in Fig. 1.5.

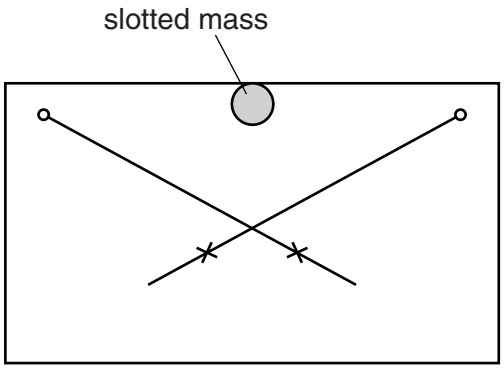

Fig. 1.5

(ii) Repeat **(b)** using the card with the mass attached.

y = ...[1]

(d) The mass attached to the card is m. Increase m by fixing another 10 g slotted mass on top of, or behind, the first mass.

Record m and repeat **(b)** until you have six sets of readings of m and y. Include your results from **(b)** and **(c)**.

Include values of $y(C + m)$ in your table.

[10]

(e) (i) Plot a graph of $y(C + m)$ on the y-axis against m on the x-axis. [3]

(ii) Draw the straight line of best fit. [1]

(iii) Determine the gradient and y-intercept of this line.

gradient = ...

y-intercept = ...

[2]

© UCLES 2015

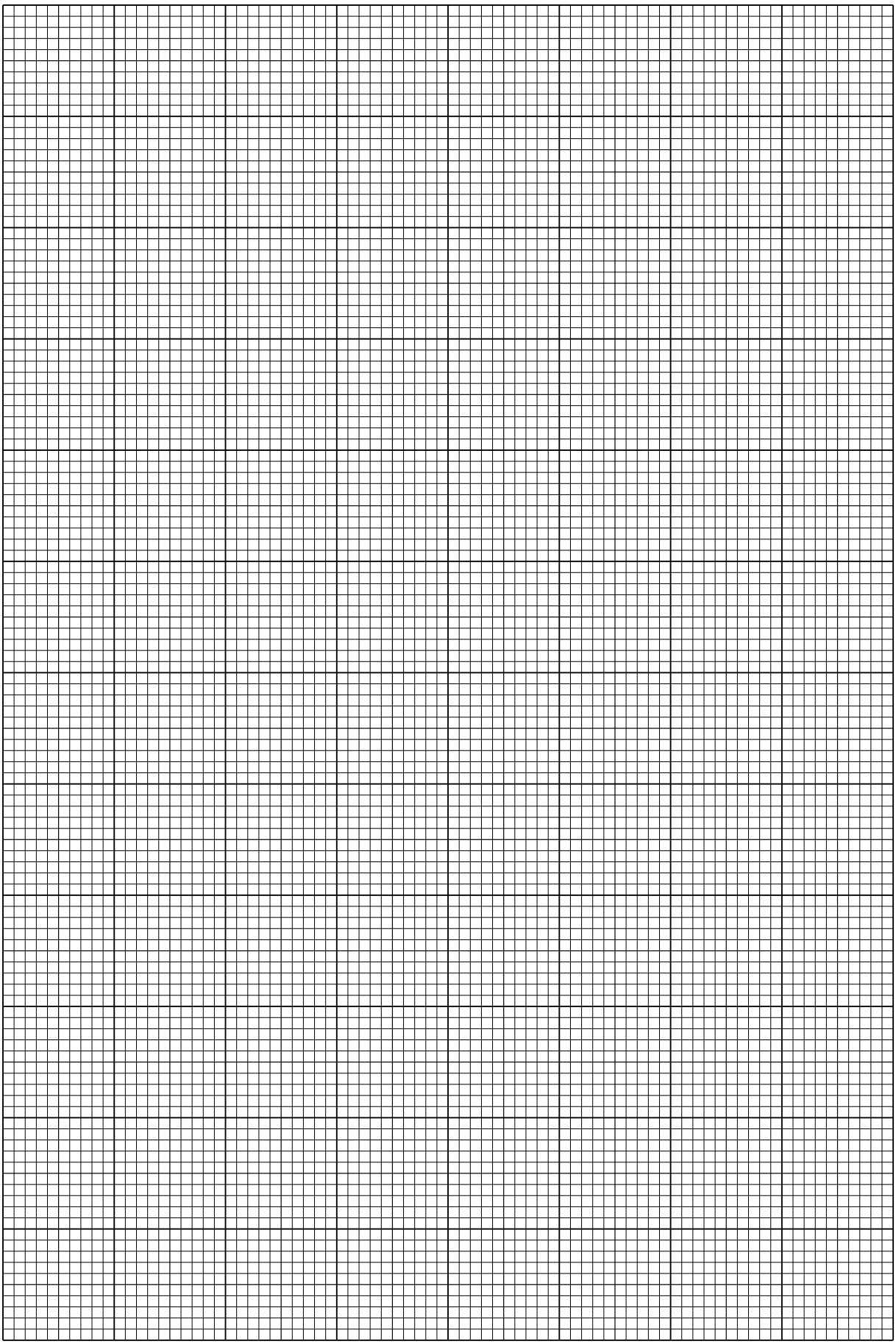

(f) It is suggested that the quantities y, C and m are related by the equation

$$y(C + m) = Am + \frac{AB}{2}$$

where A and B are constants.

Use your answers in **(e)(iii)** to determine the values of A and B.
Give appropriate units.

$A =$ .....

$B =$ .....

[2]

You may not need to use all of the materials provided.

2 In this experiment, you will investigate the motion of a small container in water.

(a) You have been provided with three glass marbles and a small container with a separate lid.

The dimensions of the glass marbles and the small container are shown in Fig. 2.1.

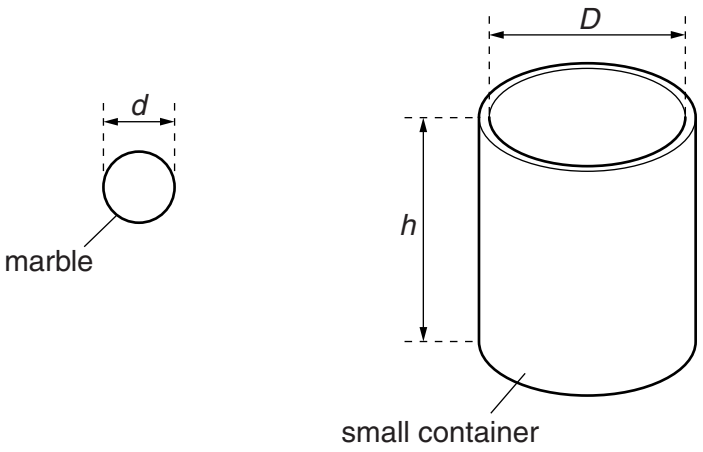

Fig. 2.1

(i) Measure and record the diameter *d* of the marble and the inner diameter *D* of the small container.

d = ...

D = ... [1]

(ii) Measure and record the height *h* of the small container.

h = ...[1]

(iii) Estimate the percentage uncertainty in your value of d.

percentage uncertainty = ...[1]

(b) (i) Place the small container in the tray. Fill the small container with water from the beaker.

(ii) Place **two** glass marbles in the small container. Wait until the water has stopped overflowing. Place the lid on the small container.

(iii) The fraction x of glass in the small container is given by

$$x = \frac{2nd^3}{3D^2h}$$

where n is the number of marbles in the small container.

Calculate x.

x = ...[1]

(c) Justify the number of significant figures that you have given for your value of x.

.....

.....

.....[1]

(d) (i) Place the small container in the cylinder as shown in Fig. 2.2.

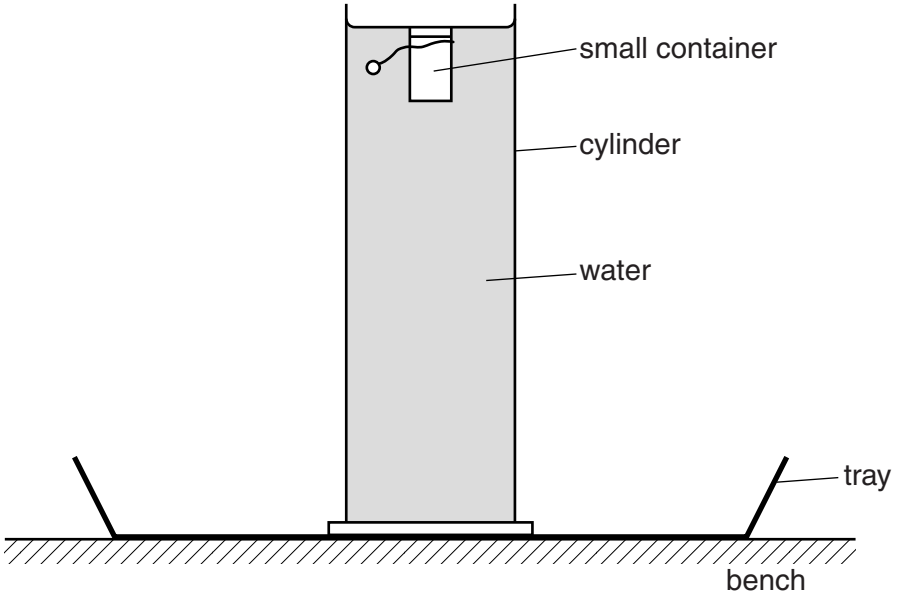

Fig. 2.2

(ii) Release the small container and measure the time *t* taken for the small container to fall to the bottom of the cylinder.

t = ...[2]

(e) Repeat **(b)** and **(d)** using **three** marbles.

$x =$ .....

$t =$ .....

[3]

(f) It is suggested that the relationship between t and x is

$$t^2 = \frac{k}{x}$$

where k is a constant.

(i) Using your data, calculate two values of k.

first value of k = ...

second value of k = ...

[1]

(ii) Explain whether your results support the suggested relationship.

.....

.....

.....

.....[1]

(g) (i) Describe four sources of uncertainty or limitations of the procedure for this experiment.

1. .....

.....

2. .....

.....

3. .....

.....

4. .....

.....

[4]

(ii) Describe four improvements that could be made to this experiment. You may suggest the use of other apparatus or different procedures.

1. .....

.....

2. .....

.....

3. .....

.....

4. .....

.....

[4]

BLANK PAGE

© UCLES 2015

BLANK PAGE

Permission to reproduce items where third-party owned material protected by copyright is included has been sought and cleared where possible. Every reasonable effort has been made by the publisher (UCLES) to trace copyright holders, but if any items requiring clearance have unwittingly been included, the publisher will be pleased to make amends at the earliest possible opportunity.

To avoid the issue of disclosure of answer-related information to candidates, all copyright acknowledgements are reproduced online in the Cambridge International Examinations Copyright Acknowledgements Booklet. This is produced for each series of examinations and is freely available to download at www.cie.org.uk after the live examination series.

Cambridge International Examinations is part of the Cambridge Assessment Group. Cambridge Assessment is the brand name of University of Cambridge Local Examinations Syndicate (UCLES), which is itself a department of the University of Cambridge.